DOI: http://doi.org/10.25728/cs.2021.6.2

STRESS TESTING OF NONFINANCIAL ORGANIZATIONS: AN ANALYTICAL APPROACH TO SOLVING THE REVERSE PROBLEM

A.S. Bogomolov[1,2], M.M. Dvoryashina[3], O.I. Dranko[3], V.A. Kushnikov[1], and A.F. Rezchikov[3]

[1]Institute for Problems of Precision Mechanics and Control, Russian Academy of Sciences, Saratov, Russia
[2]Saratov State University, Saratov, Russia
[3]Trapeznikov Institute of Control Sciences, Russian Academy of Sciences, Moscow, Russia

✉ bogomolov@iptmuran.ru, ✉ dvoryashina@gmail.com, ✉ olegdranko@gmail.com,

✉ kushnikoff@yandex.ru, ✉ rw4cy@mail.ru

Abstract. This paper considers an approach to stress testing of nonfinancial organizations. It includes the problem statement and a methodology for solving the reverse problem. The mathematical model is based on open-source data (the financial statements of companies). The relevance of this approach is increasing due to different-nature crises (economic crisis, the COVID-19 pandemic, etc.). The resilience of companies (especially "backbone" ones) to shock situations is tested, and preventive management measures are developed. The direct problem statement involves determining the company's financial model parameters that ensure a nonnegative level of cash balance in the forecast period. The reverse problem is to find the characteristics of the financial and economic state of the enterprise that correspond to different critical combinations of its financial result parameters. We develop an original stress-testing methodology that significantly reduces the labor intensity and computational complexity compared to stress-testing technologies for financial institutions. A new analytical model is used. The model results are illustrated by an example: stress testing of a backbone enterprise in the real economy sector, which was significantly affected by restrictive measures in the COVID-19 pandemic. Model calculations employ open data from the organization's financial statements.

Keywords: stress testing, critical combinations of parameters, risk management, financial forecasting, modeling, reverse problem, cash flow, operational efficiency, COVID-19.

INTRODUCTION

The large-scale economic crisis caused by restrictive measures under the COVID-19 pandemic provoked a sharp sales slowdown in many markets for goods and services of the real sector of the global economy, resulting in mass bankruptcies in some industries, a request from business for financial support of the companies most affected by the crisis,[1] and emergency measures of governments. The Russian Government's Decree[2] provides several financial support measures for business: subsidies for reimbursement of costs, deferral of taxes and advance payments, state guarantees to restructure the existing loans or issue new loans, and bond issues. First and foremost, these measures apply to the so-called backbone enterprises.[3]

These efforts of the Government are intended to improve the sustainability of the Russian economy. For a backbone organization to obtain state measures of financial support, a prerequisite is to analyze its financial and economic activities, assess its financial stability (stress test) in accordance with the procedure

[1] URL: https://www.cbr.ru/covid/ (Accessed May 25, 2021).

[2] URL: http://government.ru/docs/39665/ (Accessed May 25, 2021).

[3] URL: https://data.economy.gov.ru/ (Accessed May 25, 2021).

established by the Ministry of Economic Development of the Russian Federation.[4]

Financial resilience assessment methods (stress testing) have been known in the theory and practice of risk management for more than two decades. However, they are more widespread in the banking sector of the economy, which is under strong pressure from regulators along with environment factors. Stress-testing procedures are almost not used in the real economy sector due to the complexity of mathematical models involved. The complexity and ambiguity of stress testing for nonfinancial organizations lies in the need to develop:

– scenarios of the behavior of enterprises' economic indicators in a stress situation (crisis),

– forecasting models.

We propose a stress-testing scheme, which consists of the following main measures:

– obtaining data on the financial and economic state of a managed object;

– developing stress-testing scenarios;

– adjusting the mathematical model of the managed object affected by these scenarios;

– conducting computational experiments with the mathematical model;

– analyzing the results of mathematical modeling;

– developing action plans to prevent possible critical situations diagnosed by stress testing.

Within the proposed approach, it is possible to correct the scenarios and parameters of the mathematical model with the subsequent computational experiments and the analysis of the received results by decision-makers. An important and labor-intensive stage of these studies is simulating changes in the enterprise production process under different stress-testing scenarios.

We develop an original methodology that significantly reduces the labor intensity and computational complexity of the experiments by using a new mathematical model in analytical form. This model describes the dynamics of the financial and economic state of the enterprise under different values of the control parameters of the models and disturbances.

The computational complexity is reduced by developing the following:

- A model to forecast the dynamics of the enterprise's financial and economic state in the analytical form, used to solve the direct problem. This problem consists in forecasting the values of the enterprise's financial and economic indicators on different periods and determining the critical combination of parameters that destabilize or completely halts the enterprise.
- Models and methods for solving the reverse problem, which consists in determining the states of the enterprise corresponding to different critical combinations of parameters. The labor intensity is significantly reduced by using a mathematical model in analytical form.

1. RELATED LITERATURE

In a general scientific sense, a stress test is a form of testing to determine the stability of a system under some external disturbances.

Research on stress testing is based on studies of the financial stability of a business organization. M.E. Zmijewski [1] surveyed studies to determine financial instability indicators (problems, *distress*, and bankruptcy). In particular, the bankruptcy indicators (financial coefficients) were justified mostly using a comparative analysis of financial indicators of sampled companies with and without financial problems (*distressed*).

In corporate finance, the concept of stress test appeared in the late 1990s. The prerequisites were the advances in the theory and practice of corporate credit risk analysis, bankruptcy probability modeling, and research based on large empirical data arrays of American companies carried out by leading rating agencies (Moody's, S&P, and Fitch). Several generations of approaches to the corresponding problems were surveyed in [2–4].

A stress test checks the financial position endurance of an organization under a "severe yet probable shock."[5] Stress testing of an organization is an alternative to financial forecasts. Stress-testing models determine sensitivity to single risk factors and different combinations of critical factors. A stress test typically includes four elements:

- A set of risks to be tested.
- A scenario in which the risks are implemented. These can be scenarios of economic recession, growth of unemployment, or fall of real estate prices on the stress test horizon. As a rule, the stress test horizon is 2–5 years.
- Models describing the effect of risks on the tested parameters. Stress-testing models for financial

[4] Order of the Ministry of Economic Development of the Russian Federation of May 13, 2020, No. 276 "On Approval of the Procedure for Assessing Financial Stability (Stress Test) of Backbone Enterprises of the Russian Economy Applying for State Support Measures in 2020." URL:https://www.garant.ru/products/ipo/prime/doc/73936434/#1000 (Accessed May 25, 2021).

[5] URL: https://www.cbr.ru/finstab/stress_testing/chto-takoe-stress-testirovanie/what_is_stress_testing/ (Accessed April 20, 2021).

institutions determine relationships between macroeconomic indices, market indicators (interest rates, bond yields, stock prices, etc.), and financial parameters (e.g., ratings of corporate borrowers) that affect the volume of additional provisions on loans.

- Measurement of results. In most cases, the financial result on the stress test horizon is assessed, the final capital adequacy indicator is compared with the standard, and the capital deficit is calculated. In several stress tests, the liquidity shortage is also assessed.

There are two basic approaches, *bottom-up* and *top-down* stress tests. According to the first approach, the organization applies a stress-testing methodology independently (initiative stress testing). The regulator performs the top-down stress test using supervisory or publicly available information on individual organizations according to a single definite scenario. The bottom-up stress test is performed by financial institutions using internal data and models but with the same scenario defined by the regulator. The stress-testing principles for financial institutions are comprehensively described in the Requirements of the Basel Committee on Banking Supervision (BCBS).[6]

In October 2009, *The Financial Stability Board* released the report "*Risk Management Lessons from the Global Banking Crisis of* 2008."[7] It paid special attention to stress testing, especially emphasizing the importance of *reverse stress tests*. Unlike standard stress tests, they identify a set of scenarios (combinations of risk factors) in which an organization will lose financial stability. That is, *reverse stress testing* (the reverse problem) analyzes financial stability from the other side, defining limiting values of risk factors under which an organization will be bankrupt. For this purpose, the boundary values of financial stability indices are identified under which an organization becomes bankrupt; then, the events that can lead to such values of the indices are determined.

There are few publications on stress-testing methods for companies of the real economy sector, although this topic is studied within risk management, a rather rapidly developing discipline. In the western stress-testing practice of nonfinancial organizations, the following models were described and are widely used:

– The credit risk model (SEBRA-model), developed by the Norwegian Bank to forecast the annual probability of borrower firm bankruptcy.

– Moody's Analytics RiscCalc model.[8] The model is based on financial analysis indices (financial statements) with an additional correction for the probability of bankruptcy [5]. The model forecasts the probability of bankruptcy and the expected losses of credit institutions.

The paper [6] considered the Ooghe–Joos–De Vos model of forecasting the bankruptcy of firms (eight factors for one year and six factors for three years). Also, the authors studied the accuracy of bankruptcy forecasting by the first-kind error of credit risk (bankrupt firms were defined as non-bankrupt) and the second-kind error of commercial risk (non-bankrupt firms were defined as bankrupt). In this model, both errors belonged to the range 14–33% for a sample of 280 000 firms in Belgium (6.5% bankrupts).

Among the research works included in the Russian Science Citation Index (RSCI) database[9] as of May 1, 2021, only nine publications on the banking sector and one publication on nonfinancial organizations were found with the keyword "stress test." The paper [7] surveyed different approaches to forming stress tests in the financial sector.

Mainly regression models are used for stress testing, whereas simulation models are not. The authors [8] briefly discussed publications on stress testing of enterprises. In particular, three assessment methods (econometric, discriminant, and mixed) and five approaches according to the set of variables (market, microeconomic (balance), macroeconomic, hybrid, and rating) were distinguished. The paper [8] considered an approach to stress testing of companies of the Russian economy's real sector based on enterprise statements, micro-sector indices, and forecasts of sectoral indices within macroeconomic forecasts. In addition, possible approaches to assessing the probability of the organization's default (bankruptcy) were surveyed.

The papers [9, 10] considered financial coefficients developed based on organizations' financial statements by the correlation with organizations' defaults.

In [11], the Altman models (five factors) were applied for a sample of enterprises in the Orenburg region. As shown therein, the accuracy of bankruptcy forecasting for four years is 20%. The Olson bankruptcy forecasting models (nine factors) show an accuracy of about 20% for one year.

The principles of corporate finances include [12] the concepts of risk probability and the definition of possible damage. It is reasonable to estimate damage using mathematical models.

[6] URL: https://www.bis.org/bcbs/index.htm (Accessed May 25, 2021).
[7] URL: https://www.sec.gov/news/press/2009/report102109.pdf (Accessed June 1, 2021).
[8] URL: https://www.moodysanalytics.com/product-list/riskcalc (Accessed January 5, 2021).
[9] URL: https://elibrary.ru (Accessed May 2, 2021).

In topical problems of stress testing, it is necessary to analyze the effect of inner and outer environment factors on the target values of financial state indices. As we believe, the concept of critical (emergency) combinations of events [13, 14] should be used here. This concept involves the analysis of the effect of individual factors considering their causal relations with other factors. Relatively insignificant individual events may occur in a definite order, producing a synergistic effect. With the concept of critical combinations, synergy can be taken into account. The development of such undesirable effects is prevented using a set of measures determined by the algorithms proposed within the concept [15]. The effect of critical combinations of factors should be studied starting with the partial effect of individual factors considering possible significant causal relations of a given factor with other variables.

The paper [16] surveyed methods of single-factor stress tests for banks. In [17], a regression model was considered to identify the factors affecting the financial stability of enterprises (their dependence on the sources of funding) in the Ukrainian food sector on open panel data.

According to Order of the Ministry of Economic Development of the Russian Federation No. 276 of May 13, 2020 (footnote no. 4), monthly scenarios for assessing the stability of Russian backbone organizations should be formed, and the risk category of the organization should be determined. The list of Russian economy's sectors most affected by the deteriorated situation due to the spread of a new coronavirus infection was developed.[10] Twelve sectors were identified, whose activities were paralyzed under the current restrictions; particularly transportation, leisure and entertainment, hotel business and public catering, and population consumer services. Besides, the Ministry of Economic Development of the Russian Federation developed the list of 1392 backbone enterprises as of May 20, 2021.[11]

As we believe, this work was not continued due to the absence of reliable tools for stress testing of nonfinancial organizations. Hence, the approach proposed below is of scientific and practical significance.

This paper develops a methodology for evaluating the parameters of a mathematical model of the stress-testing procedure under which a nonfinancial organization will have a nonnegative cash balance on different management periods under significant environment disturbances. Unlike the existing approaches, this methodology uses the forecasting model of the enterprise's financial and economic state in the analytical form. As a result, the reverse problem is solved in analytical form, and the time complexity of the developed algorithms is significantly reduced.

2. PROBLEM STATEMENT AND GENERAL SOLUTION APPROACH

The model of forecasting the financial state of an enterprise is the key to stress testing [18]. However, as practice shows, this formal apparatus does not yield a mathematical model for stress testing of enterprises. Such a model determines conditions for a nonnegative cash balance at the end of the forecast period under known constraints on the enterprise's material and financial resources.

It is necessary to develop the enterprise's management model with a cash flow criterion under significant adverse impacts from the outer environment (e.g., lockdown and drop in consumer demand, also called knockdown for business).

The stress-testing procedure of nonfinancial organizations is generally represented by the information-logical scheme in the figure below.

We believe that stress testing of nonfinancial organizations is one of the most important problems.

Let $F(x, u, t)$ be a main financial and economic criterion of the enterprise's activity, where x denotes a vector of parameters, u is a vector of control parameters, and t indicates time.

One significant index can be identified for analyzing the critical factors of the enterprise's activity, namely, the cash forecast at the end of the forecast period:

$$F(x, u, t) = Cash_t .$$

The critical importance of this criterion is clear: with $Cash_t \geq 0$, the enterprise continues to operate (at least by financial conditions), whereas with $Cash_t < 0$, it terminates the activity due to real insolvency.

Let $F(x, u, t) = Cash_t < 0$ be the solution of the direct forecasting problem. The forecasted value $Cash_t$ may be less than zero. In reality, however, there is no passive asset balance (including cash). In other words, such a forecast is not feasible. A negative cash flow value may indicate an imbalance in the organization's financial plans and its possible insolvency (bankruptcy). The common reasoning is that in the case of passive cash balance, the enterprise gets into debt. This means two operations: increases in borrowed funds (debts) and cash (to a nonnegative value).

[10] Decree of the Government of the Russian Federation of April 03, 2020, No. 434 (as amended on October 16, 2020) "On Approval of the List of Russian Economy's Sectors Most Affected by the Deteriorated Situation due to the Spread of a New Coronavirus Infection." URL: https://base.garant.ru/73846630/ (Accessed May 25, 2021).

[11] URL: https://data.economy.gov.ru/analytics/facilities/industry (Accessed May 20, 2021).

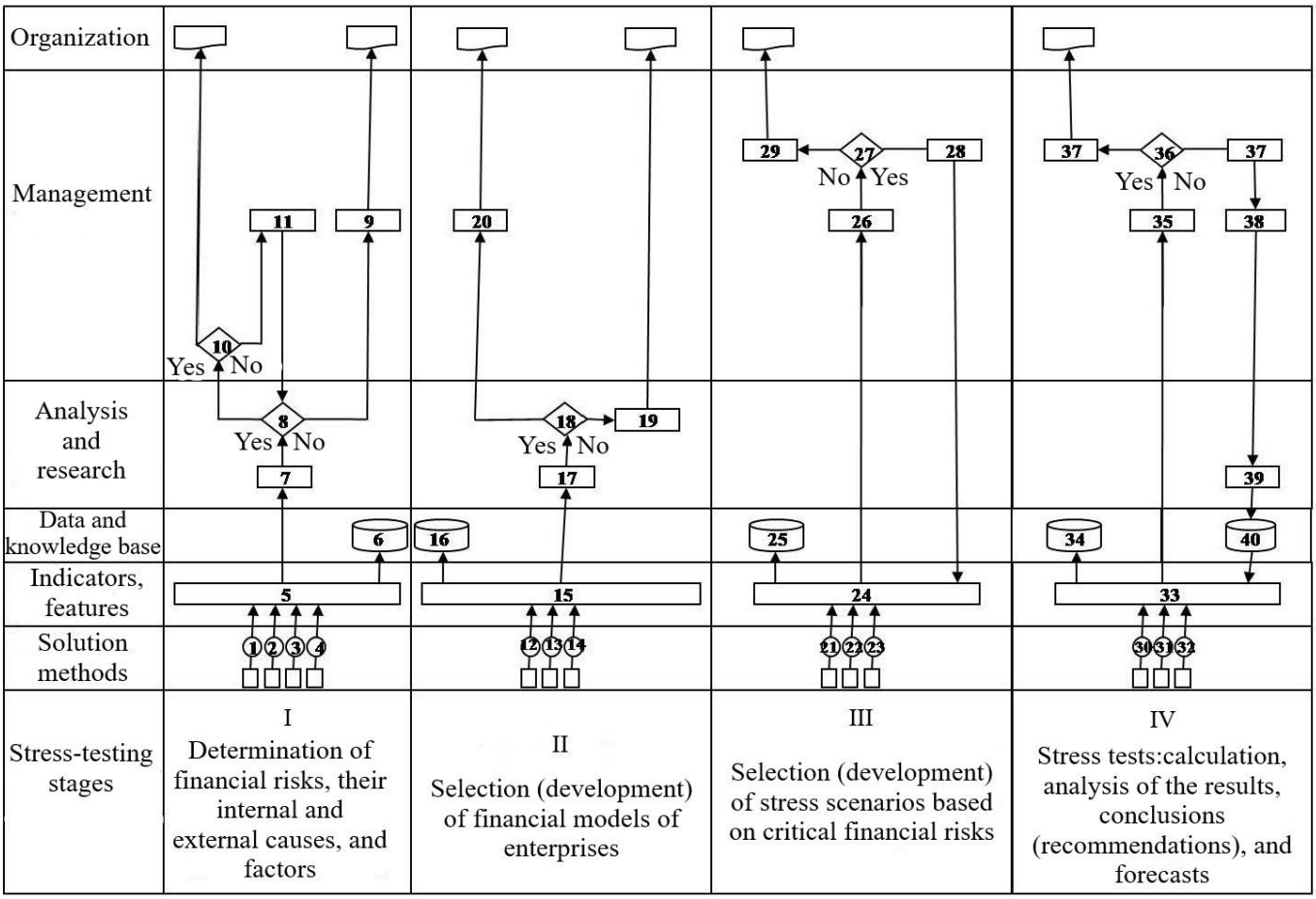

Fig. The information-logical scheme of stress-testing procedures of nonfinancial organizations: 1–4 — parametric method, regression analysis, retrospective analysis, the method of similar companies; 5 — risk analysis method selection based on current indicators and attributes; 6 — fixation of the results in company's data and knowledge base; 7 — justification and testing of the selected risks, justification of the complete set of factors affecting them; 8 — Are the analysis results satisfactory?; 9 — return to Block 5; 10 — Does the management approve the selected risks and factors?; 11 — return to the analysis of the first stage results (Block 8); 12 — historical data analysis; 13 — expert methods; 14 — methods for determining the stability of the model parameters to stress factors and model horizons; 15 — selection of the organization's financial model; 16 — entering information into the data and knowledge base; 17 — determining the model accuracy on the horizons; 18 — Is the model accuracy satisfactory?; 19 — return to horizons determination, etc.; 20 — approval by the head of the analytical department; 21–23— methods for developing stress scenarios; 24 — selection of the basic set of stress scenarios; 25 — entering information into the data and knowledge base; 26 — assessment of the scenarios by the organization's management; 27 — Does the set of scenarios correspond to the current completeness and accuracy requirements?; 28 — selection of relevant procedures and responsible executors for finalizing the set of scenarios; 29 – – preparation of intermediate results; 30 — modeling; 31 — analysis of the results; 32 — formation of conclusions; 33 — formation of options to answer the main questions based on the conclusions; 34 — entering information into the data and knowledge base; 35 — presentation of the results; 36 — Are the answers to the questions yielded by stress testing satisfactory?; 37 — preparation of the obtained solutions for implementation; 38 — detailed formulation of claims to the results of stress testing; 39 — analysis of updated requirements; 40 — updating the data and knowledge bases.

The problem is to develop a mathematical model for stress-testing of enterprises and determine conditions for a nonnegative cash balance at the end of the forecast period under known constraints on the enterprise's material and financial resources.

The general-form solution is not unique and is defined by some hypersurface U of the parameters u. For the sake of simplicity, we fix all parameters except the change in revenue (denoted by u_1). The reverse problem has the following statement: find the limiting value of the parameter u_1 such that

$$F(x, u_1, t) = Cash_t = 0.$$

Due to the analytical form of the financial state forecasting model proposed below, we solve the reverse problem in the analytical form. Hence, the calculations and possible studies are considerably simplified.

3. MATHEMATICAL MODEL FOR STRESS TESTING

The list of upper-level financial and economic indices is determined by the financial statements of the enterprise. This choice of indices is dictated by the open-source data on financial statements. For real administration, the enterprise's management uses a much wider list of managerial statement indices, which are not available to third-party users. The approach presented below considers this fact. The directions of

changes in the parameters are determined at the upper level using open-source data. Then, they are specified at the lower level using the data available to management.

We propose an approach to constructing a mathematical model. Its main idea can be stated as follows.

- The enterprise's financial state is described by combining its balance sheet at a particular date and its income and expenditure account (gains for a particular period).
- The growth drivers are distinguished. In this paper, the revenue (sales volume) is used.
- The management parameters are forecasted. Since production technologies and business management processes are rather inertial,[12] the specific characteristics of the financial state are constant or change insignificantly on the forecast period. This approach is called the percentage-of-sales method [19, 20].
- The forecast of the financial and economic indices has the general form

$$x_t = x_{t-1}(x_{t-1}, u),$$

where x is the vector of model variables corresponding to the enterprise's financial and economic parameters, and u denotes the control vector.

Different forecasting sub-models are used to forecast different indices [18]. For example, the accounts receivable are forecasted by the formula

$$Y_t = l_{Yt} S_t$$

with the following notations: Y is an index from the vector x corresponding to the accounts receivable (in thousand rubles (RUB)); S gives the revenue (in thousand RUB per year); l_Y denotes the turnover of the accounts receivable (in years). In the formulas below, the indices measured in monetary units are specified in thousand RUB, and the turnover indices are specified in years.

The turnover is determined by the average turnover coefficient over the previous periods:

$$l_{Yt} = \frac{1}{t-1}\sum_{j=1}^{t-1}\frac{Y_j}{S_j}.$$

It is possible to use a linear dependence of the form $l_{Yt} = A_Y S_t + B_Y$, where A_Y and B_Y denote linear regression coefficients. Linear regression is one of the simplest approaches. Using more complex regressions for economic calculations is not excluded. (However, we have not encountered organizations practicing such regressions in the real economy sector.)

The inventory turnover is determined by technological and managerial business processes: technological operations, internal production movements, procurement processes, and inventory delivery. Such processes are inertial and are quite stable for enterprises with established technologies. Hence, the following assumption seems natural: if the business processes have no changes, the turnover period will remain the same (or slightly vary) for the next forecast period.

- The relation between the balance sheet and the income and expenditure account is considered: undistributed profit increases equity capital.
- The cash flow is forecasted using the indirect method.[13] A passive cash balance is formed when the forecasted assets exceed the forecasted liabilities. This indicates the enterprise's insolvency.
- Measures for eliminating the cash deficit in real management are considered and implemented. In the stress-testing model, we fix the limit revenue causing insolvency. Also, we suppose that the management parameters cannot increase the system's efficiency "in the stress time" and are therefore constant.

In real management, several parameters often vary simultaneously. To forecast the production-oriented behavior of an enterprise, we should set scenarios for varying the parameters of sales, production, purchases, working capital requirements, etc. Different combinations of the parameters form a Cartesian set, and their total number is given by $N_i \times N_j \times N_{lm} \times N_f \times N_d$, where: N_i is the number of product types; N_j is the number of resource types; N_l is the number of currencies; N_m is the number of equipment types; N_f is the number of fixed cost items; N_d is the number of credits.

Direct calculations can be labor-, time-, and computationally intensive. Most important, they are not provided with information in the operational mode. One way to find a critical combination of the parameters is Monte Carlo analysis with a given probability distribution for each parameter. Note that many enterprises have no information about the probability distribution of parameters. Acquiring and processing this information is a rather labor-intensive procedure, and such an approach is not implementable in practice.

This paper considers another approach: using the total values of indices and studying their variation scenarios.

We write the mathematical model for calculating the cash balance at the end of the forecast period:

$$Cash_t = Cash_{t-1} + CF_t, \quad (1)$$

where $Cash$ is the cash balance, CF denotes the cash flow, and t indicates the period.

The cash flow is determined indirectly by the formula

$$CF = Pr + Am - I + \Delta D, \quad (2)$$

[12] If financial state characteristics change significantly, sub-models are required to forecast these parameters.

[13] In this paper, the indirect cash flow method is important due to interconnecting the cash flow with changes in balance sheet items.

where: Pr denotes the undistributed profit; Am is the amortization; I means the investments; ΔD is the change in debt. (The time variable t is omitted to simplify the expression within a single period.)

The undistributed profit for the forecast period is given by

$$Pr = (S(1-v) - FC - r_D D)(1-r_\tau)(1-r_u), \quad (3)$$

where: v denotes the share of variable costs; FC is the fixed costs without interest; D means the debt (loans); r_D is the interest rate on loans; r_τ is the income tax rate; r_u is the share of net income for consumption (dividends).

The net investments are defined as the gains on fixed assets at residual value considering the amortization and changes in the net working capital:

$$I - Am = \Delta FA + \Delta WC = n_{FA} FA + l_{WC} \Delta S, \quad (4)$$

where: FA denotes the fixed assets; WC is the net working capital (the difference between the current assets and current liabilities); n_{FA} means the increase in the residual value of the fixed assets; l_{WC} indicates the turnover of the net working capital.

The mathematical model with the total values of the indices takes the form

$$Cash_t = Cash_{t-1} + (S(1-v) - FC - r_D D) \times$$
$$\times (1-r_\tau)(1-r_u) - (\Delta FA + \Delta WC) + \Delta D.$$

4. STRESS TEST AS A SCENARIO OF VARYING SEVERAL PARAMETERS

Stress-testing scenarios are difficult to formulate: it is necessary to describe variations of target values and performance indices, consider the impact of a development program, etc. However, many parameters remain invariable (have not enough time to vary) in the shock situation, which simplifies the problem statement and calculations.

In what follows, we consider a one-factor stress test (variation of one parameter). However, the forecasting model proposed below is suitable to analyze and perform calculations for more parameters. The multifactor case goes beyond the scope of this paper.

Let us introduce the coefficients of stress test influence on each parameter. The stress test situation assumes negative influences, leading to decreased revenue, cost savings, reduced investments, etc. Therefore, as a rule, these coefficients belong to the segment [0, 1]. If the indices increase, the corresponding coefficient will be greater than unity.

We consider the following scenario of varying the factors:

- The main parameter is decreased revenue: a drop in the demand and a reduction in sales ($k_S < 1$).
- There is no decrease in the direct (variable) costs of sold products: the specific variable costs are constant ($k_v = 1.0$).
- The wage fund is maintained at the same level due to the no-dismissal requirement (or reduced at most by 10%): k_W = 0.9–1.0 if the number of employees is reserved, or k_W = 0.5–0.9 if the number of employees is reduced.
- There is no decrease in the overhead (fixed) costs of sold products: the fixed costs (administrative and business expenses) remain the same ($k_{FC} = 1.0$).
- There is no change in the accounting policy: the balances of other income and expenses remain the same: $k_{OthInc} = 1.0$. (Note that they are quite large sums comparable to sales profit, usually without a detailed breakdown of the items.)
- The inventory is changing under two factors:

– The replenishment of unsold goods due to inertial production. The production response coefficient is k_p = 1 for inertial productions with the previous production program or k_p = 0 for organizations with the rapidly restructured purchases, production, and sales.

– Turnover reduction.

- The accounts receivable can vary in the shock state (coming in a sharply reduced amount): the buyers also experience a drop in sales and cash receipts. This paper considers a “moderate” shock scenario: the accounts receivable decrease proportionally to the revenue.
- The accounts payable to counterparties are paid proportionally to the costs.
- The short- and long-term loans are not repayable: $k_D = 1.0$. (For the sake of simplicity, we combine them.) This assumption is important since banks should (may) demand early repayment of loans in case of violating banking covenants.
- The investment program is implemented in a reduced amount with the coefficient k_{FA} (in the case of no changes, $k_{FA} = 1$).

In the shock scenario, the environment parameters vary sharply, and the organization has no time to change the internal management parameters and business processes. Hence, the organization has to meet the stress test criteria without internal changes.

This paper considers the scenario of declining revenue during the analyzed period. In practice, there may be more complex scenarios: revenue decline is followed by a reduction in costs and optimization of assets. Moreover, at many enterprises, production and shipment of goods are completed by the end of the

year, and the annual financial statements "ignore" the intraannual gains on current assets (inventory, advances given, and debtors). These current assets are "frozen" for declining revenue, and the consequences become more serious.

5. A MODEL VARIATION OF MANAGEMENT PARAMETERS REQUIRED FOR NON-RISKY DEVELOPMENT

The system of equations (1)–(5) with the scenario parameters of stress testing takes the following form.

The retained earnings vary according to the equation

$$Pr_C = (k_S S(1-k_v v) - k_{FA} FC - k_D r_D D)\times \times(1-r_\tau)(1-r_u), \quad (6)$$

where: k_S is the revenue variation coefficient; k_v is the variation coefficient of the specific variable costs; k_{FC} is the variation coefficient of the fixed costs; k_D is the variation coefficient of interest on loans; C is the stress test subscript.

The gains on (non-current and current) assets are determined by the investments.

The inventory is recorded on actual costs. The inventory at the end of period (t – 1) is described by the equation

$$Inv_{t-1} = l_{Inv}\, TC_{t-1},$$
$$VC = v\, S,$$
$$TC = VC + FC = v\, S + FC,$$

where: Inv denotes the inventory; l_{Inv} is the inventory turnover; TC is the total costs (without interest on loans); VC is the variable costs.

The inventory at the end of period t, considering overstocking, is described by the equation

$$Inv_t = k_{Inv}\, l_{Inv}\, TC_t - k_p(TC_t - TC_{t\text{-}1}),$$

where: k_{Inv} is the inventory variation coefficient; k_p is the production response coefficient.

The investments in the inventory (a working capital component) are described by the equation

$$\Delta Inv_C = Inv_t - Inv_{t-1} = k_{Inv}\, l_{Inv}\, TC_t - l_{Inv}\, TC_{t-1} - k_p(TC_t - TC_{t-1}). \quad (7)$$

For inertial production, $k_p = 1$. For $k_{Inv} = 1$, we obtain $\Delta Inv_C = Inv_t - Inv_{t-1} = (l_{Inv} - 1)(TC_t - TC_{t-1})$.

The accounts receivable at the end of periods (t – 1) and t are described by the equations

$$AR_{t-1} = l_{AR}\, S_{t-1},$$
$$AR_t = k_{AR}\, l_{AR}\, S_t,$$

where: AR denotes the accounts receivable; k_{AR} is the variation coefficient of the accounts receivable; l_{AR} denotes the accounts receivable turnover.

The investments in the accounts receivable (a working capital component) are described by the equation

$$\Delta AR_C = k_{AR}\, l_{AR}\, S_t - l_{AR}\, S_{t-1} = l_{AR}(k_{AR}\, S_t - S_{t-1}). \quad (8)$$

The accounts payable at the end of periods (t – 1) and t are described by the equations

$$AP_{t-1} = l_{AP}\, TC_{t-1},$$
$$AP_t = k_{AP}\, l_{AP}\, TC_t,$$

where: AP denotes the accounts payable; k_{AP} is the variation coefficient of the accounts payable; l_{AR} is the accounts payable turnover.

The investments in the accounts payable (a working capital component) is described by the equation

$$\Delta AP_C = k_{AP}\, l_{AP}\, TC_t - l_{AP}\, TC_{t-1} = l_{AP}(k_{AP}\, TC_t - TC_{t-1}). \quad (9)$$

The working capital varies according to the equation

$$\Delta WC_C = l_{Inv}(k_{Inv}\, TC_t - TC_{t-1}) - k_p(TC_t - TC_{t-1}) + l_{AR}(k_{AR}\, S_t - S_{t-1}) - l_{AP}(k_{AP}\, TC_t - TC_{t-1}),$$

or

$$\Delta WC_C = (k_{AR}\, l_{AR} S_t - l_{AR} S_{t-1}) + \left(k_{Inv} l_{Inv} - k_{AP} l_{AP} - k_p\right)\times TC_t - \left(l_{Inv} - l_{AP} - k_p\right) TC_{t-1}. \quad (10)$$

The investment program is implemented with the coefficient k_{FA} (in the case of no changes, $k_{FA} = 1$):

$$\Delta FA_C = k_{FA}\, n_{FA}\, FA_{t-1},$$

where k_{FA} is the variation coefficient of the investments in the non-current assets.

The investments in non-current and current assets minus accounts payable are equal to

$$I_C = k_{FA} n_{FA} FA_{t-1} + (k_{AR}\, l_{AR} S_t - l_{AR} S_{t-1}) + \left(k_{Inv} l_{Inv} - k_{AP} l_{AP} - k_p\right) TC_t - \left(l_{Inv} - l_{AP} - k_p\right) TC_{t-1}. \quad (11)$$

The debt varies according to the equation

$$\Delta D_C = (k_D - 1) D_{t-1}, \quad (12)$$

where k_D is the share of the existing loans.

For the sake of brevity, we introduce the notations $r_{\tau u} = (1-r_\tau)(1-r_u)$, $l_{TC1} = \left(l_{Inv} - l_{AP} - k_p\right)$, and $l_{TC} = \left(k_{Inv} l_{Inv} - k_{AP} l_{AP} - k_p\right)$.

Due to formulas (5)–(12), the cash balance nonnegativity condition is written as

$$Cash_t = Cash_{t-1} + (k_D - 1) D_{t-1} - k_{FA} n_{FA} FA_{t-1} + (S_t(1-k_v v) - k_{FC} FC_t - k_D r_D D_{t-1}) r_{\tau u} - [\,(k_{AR}\, l_{AR} S_t - l_{AR} S_{t-1}) + l_{TC}(k_v v S_t + FC_t) - l_{TC1} TC_{t-1}] \geq 0,$$

or

$$Cash_t = Cash_{t-1} + (k_D - 1)D_{t-1} - k_{FA} n_{FA} FA_{t-1} + S_t\left[(1-k_v v)r_{\tau u} - k_{AR}\, l_{AR} - l_{TC} k_v v\right] - (k_{FC} FC_t + k_D r_D D_{t-1})r_{\tau u} - l_{TC} FC_t + l_{AR} S_{t-1} + l_{TC1} TC_{t-1} \geq 0.$$

The financial forecasting model yields an analytical solution of the reverse problem: using this model, we determine the limiting values of the scenario parameters that still satisfy the stress test conditions.

For the one-factor test, the limiting variation of revenue for $Cash_t = 0$ and $S_t = k_S S_{t-1}$ is given by

$$k_S^{\,d} = -\frac{Z}{S_{t-1}[(1-k_v v)r_{\tau u} - k_{AR}\, l_{AR} - l_{TC} k_v v]},$$

$$Z = Cash_{t-1} + (k_D - 1)D_{t-1} - k_{FA} n_{FA} FA_{t-1} - (k_{FC} FC_t + k_D r_D D_{t-1})r_{\tau u} - l_{TC} FC_t + l_{AR} S_{t-1} + l_{TC1} TC_{t-1},$$

where the superscript d indicates no deficit.

The parameters $Cash_{t-1} + (k_D - 1)D_{t-1} - k_{FA} n_{FA} FA_{t-1}$ consider cash carryover, debt repayment, and net investments in non-current assets. The parameters $(1-k_v v)r_{\tau u} - k_{AR}\, l_{AR} - l_{TC} k_v v$ show the impact of the revenue on cash carryover through the variable costs and the variable share of investments.

6. AN EXAMPLE OF CALCULATIONS FOR A BACKBONE ENTERPRISE

As an illustrative example, we performed armchair calculations for a leading Russian machine-building enterprise using a simulation model of financial statements forecasting. This enterprise is a backbone organization of the automotive sector[14] (Taxpayer Identification Number 6320002223). The data for the calculations were obtained from the Federal State Statistics Service (Rosstat)[15] for the period 2012–2018 (open source) and from the Federal Tax Service[16] (FTS) for the period 2019–2020.

We used the simulation model with slightly simplified formulas to reduce the number of parameters. The cost of goods sold was chosen as a variable part of the expenses for profit forecasting. Administrative and business expenses and the balance of other income and expenses were considered fixed expenses. The company's official statement of financial results is given in the "Actual" column; see the table below. The calculation for the next year (2020) was based on the initial data of the previous year (2019). An aggregate

Forecast of financial statement indicators under the stress test, million rubles

Items of income and expenses	Actual data for 2019	Variation, %	Income statement forecast	Increase in profit
Revenue	292 010	–22.2	227 165	–4 543
Cost of goods sold	–271 533	–	–211 251	0
Administrative and business expenses	–16 353	–	–16 353	0
Interests, net	–5 306	–	–5 306	0
Other income and expenses	–481	–	–481	0
Income tax	–423	–	0	423
Net profit	385	–	–3 734	–4 120
Items of assets and liabilities	Actual data for 2019	Variation, %	Balance forecast	Increase in cash
Non-current assets	93 704	0.0	93 704	0
Inventory	15 316	–22.2	11 915	3 401
Trade receivables	19 179	–22.2	14 920	4 259
Other current assets	344	–	344	0
Cash and short-term investments	5 253	–100.0	0	5 253
Accounts payable	41 335	–22.2	32 156	–9 179
Other current liabilities	5 465	–	5 465	0
Long-term loans	81 350	–	81 350	0
Short-term loans	4 876	–	4 876	0
Common stock	55 750	–	55 750	0
Retained earnings	–143 636	–	–147 370	–3 734
Other equity items	88 659	–	88 659	0
Total loss (+)/deficit (-) in financing	**0**	–	**0**	**0**

[14]URL: https://www.rusprofile.ru/accounting?ogrn=1026301983113 (Accessed August 14, 2021).
[15]URL: https://rosstat.gov.ru/opendata/7708234640-7708234640bdboo2018 (Accessed May 20, 2021).
[16]URL: https://bo.nalog.ru/ (Accessed May 20, 2021).

forecast of the financial statement indicators and cash flow is shown in the table. The upper part contains the forecasted income and expenses; the lower part, the forecasted assets and liabilities. The table columns provide the following information:

1. the names of items,
2. the actual data for 2019 according to the financial statements,
3. the variations of the efficiency parameters in the stress test,
4. the calculation of items under the efficiency variation,
5. the estimated contribution of items to net income and cash flows.

Let us give comments on some items. The stress test scenario considered revenue reduction by a given percentage. Other efficiency parameters for income and expenses were not varied. The result was almost no deficit: a negative cash flow reduced the cash carryover to zero.

The decrease in the revenue corresponding to zero cash balance was k_s^d = 22.2% in the one-factor stress test without efficiency variation. Moreover, the limiting revenue decline for the break-even operation was about ΔS_{be} = –4.0%. The enterprise turned out sensitive to declining revenue by the profit criterion and not so sensitive by the cash balance criterion in the shock scenario of the stress test. Note that the negative cash flow in this example mostly consists of the losses from operating activities. If the company manages to make administrative decisions to cut the costs, suspend investments, and reduce inventory in time, the results of the one-year stress test will be little affected by the revenue variation.

7. MANAGEMENT: DEVELOPING A SYSTEM OF COMPENSATING MEASURES

This section is not part of the stress-testing procedure itself, but in most cases, stress testing is performed to understand the depth of business problems and develop compensating measures.

The general areas of efficiency improvement ("anticipatory management") are well known and can be implemented with weak signals on an impending crisis. As a rule, compensating measures are applied in the accelerated mode when a crisis occurs. Some of them will be delayed and have small efficiency. In addition, "surgical" measures can be applied. A list of possible measures and the practice of their application (without claiming to be complete) were described in [19–22]. Generally speaking, the financial result and cash flow are improved using a set of measures:

– increasing sales (by the marginal profit criterion),
– decreasing technological costs,
– reducing purchase prices,
– decreasing overhead costs,
– shortening the financial and production cycle,
– optimizing the investment program,
– optimizing the assortment, including structural changes in product shares and financing conditions.

Methods to form and select promising efficiency improvement projects were described in [23, 24]. Support measures can be simulated using the TEO Invest system [25]. The paper [26] presented a list of energy-saving technologies to reduce costs.

According to experimental evidence in the successful implementation of innovative development programs, it is possible to increase revenue by 20% and reduce specific costs and turnover by 10% and 20%, respectively (in a calendar year). Note that many enterprises "know" the areas of increasing efficiency. However, the corresponding methods are not fully implemented, especially those for managing working capital, fixed capital, and risk: the enterprises focus on the profit criterion.

With stress test scenarios, an enterprise can concentrate efforts primarily on the change areas with the greatest impact on the target criteria and potential.

According to the actual performance in 2020, the enterprise's revenue declined from 292 to 257 billion RUB (12.0%). This value is smaller than the result of one-factor stress testing. A set of measures was implemented to improve the economic situation. In particular:

– The cost of goods sold decreased by 13.1% compared to the base year. The share of variable expenses decreased by 1.1% of the revenue.
– The administrative and business expenses decreased by 12.9%.
– The negative balance (difference) of other income and expenses increased by 7.5 times.
– The net interests decreased by 13.7%.

As a result, the total retained earnings constituted 0.3% of the revenue.

More significant changes were observed in assets and liabilities:

– The inventory increased by 1.8 billion RUB, and the inventory turnover grew from 20 to 26 days.
– The accounts receivable increased by 18.2 billion RUB, and their turnover increased from 24 to 52 days.
– The non-current assets increased by 9.7 billion RUB. During the crisis year, the company implemented an investment program.
– The accounts payable increased by 30.1 billion RUB, and their turnover increased from 55 to 109 days.
– The loans increased by 41.4 billion RUB.
– The cash balance increased by 42.8 billion RUB.

The increase in loans is close to the cash balance variation. The increase in accounts payable is close to the increase in accounts receivable, inventory, and investments in non-current assets. The company was able to operate successfully in the crisis year of 2020.

CONCLUSIONS

This paper has presented an approach to stress testing of nonfinancial organizations. A stress-testing model based on financial forecasting has been proposed in analytical form. The reverse problem of determining the "critical" variation of organization's revenue for deficit-free operation (with other constant parameters) has been formulated and solved.

Stress-testing scenarios with industrial enterprise peculiarities have been considered.

Calculations based on the financial statements of a leading Russian company have been executed. According to the calculation results, the safety margin for declining revenue is below 10% and can be recognized as critical.

Stress-testing procedures for nonfinancial organizations are reasonable for understanding the company's safety margin and strategic business risks and developing a set of compensating measures to ensure the company's financial and economic stability.

This paper has proposed a method for determining one parameter and estimating its variations necessary to ensure a nonnegative forecast of the enterprise's cash balance.

However, varying a single management parameter is a particular case of varying multiple ones. Therefore, a topical problem is determining combinations of several parameters whose relatively small variations will jointly produce a similar result. This problem can be solved using critical combinations of events in future works.

According to the actual changes in the illustrative example above, the one-factor stress test begins studies of admissible parameters and their variations. The proposed model can analyze the effects of economic crises, particularly the crisis caused by the COVID-19 pandemic.

REFERENCES

1. Zmijewski, M.E., Methodological Issues Related to the Estimation of Financial Distress Prediction Models, *Journal of Accounting Research*, 1984, no. 22, pp. 59–82.
2. Altman, E. I., Resti A., and Sironi, A., Analyzing and Explaining Default Recovery Rates, *A Report Submitted to International Swaps and Derivatives Dealers' Association*, London, 2001.
3. Nehrebecka, N., COVID-19: Stress-Testing Non-financial Companies: A Macroprudential Perspective. The Experience of Poland, *Eurasian Economic Review*, 2021, vol. 11, pp. 283–319.
4. Greene, J.R., Krouskos, S., Hood, J., Basnayake, H., and Casey, W., *The Stress Test Every Business Needs: A Capital Agenda for Confidently Facing Digital Disruption, Difficult Investors, Recessions, and Geopolitical Threats*, Wiley, 2018.
5. Korableva, I., Measuring the Default Risk of Private Russian Firms Using the Moody's Analytics RiscCalc Model, *Risk Menedzhment*, 2011, no. 3 (189), pp. 54–55. (In Russian.)
6. Ooghe, H., Balcaen, S., Camerlynck, J. The Ooghe-Joos-DeVos Failure Prediction Models: A Cross-Industry Validation. *Brussels economic review*, 2003, no. 46(1), 39-70.
7. Andrievskaya, I.K., Stress Testing: A Survey of Methodologies, *Upravl. Kreditn. Organiz.*, 2007, no. 5, p. 88.
8. Salnikov, V.A., Mogilat, A.N., and Maslov, I.Yu., Stress Testing for Russian Real Sector: First Approach, *Journal of the New Economic Association*, 2012, no. 4(16), pp. 46–70. http://www.econorus.org/repec/journl/2012-16-46-70r.pdf.
9. Pomazanov, M.V. and Kolokolova, O.V., Developing a Formula for the Probability of Company's Bankruptcy Based on Accounting Statements Indicators, *Operativn. Upravl. Strategich. Menedzhm. Kommerch. Banke*, 2004, no. 6. (In Russian.)
10. Kossova, T.V. and Kossova, E.V., Assessing the Credit Risk of Companies in the Russian Corporate Sector Based on Predicting the Probability of Default on Obligations, *Problemy Analiza Riska*, 2011, vol. 8, no. 2, pp. 68–78. (In Russian.)
11. Evstropov, M.V., To the Question of Possibilities Appraisal of Enterprises Bankruptcy Forecasting in Russia, *Vestn. Orenburg State Univ.*, 2008, no. , pp. 25–32. (In Russian.)
12. Brealey, R.A. and Myers, S.C., *Principles of Corporate Finance*, 7th ed., Irwin: McGraw-Hill, 2003.
13. Bogomolov, A.S., Prevention of Accidental Combinations of Events in the Control of Human-Machine Systems, *Izv. Saratov Univ. Math. Mech. Inform.*, 2019, vol. 19, no. 2, pp. 196–206.
14. Bogomolov, A.S., Ivashchenko, V.A., Kushnikov, V.A., et al., Modeling Complex for Critical Events Combinations Analysis in Aviation Transport Systems, *Control Sciences*, 2018, no. 1, pp. 74–79. (In Russian.)
15. Rezchikov, A.F. and Bogomolov, A.S., The Problem of Preventing the Development of Emergency Combinations of Events in Large-Scale Systems, *Proceedings of 12th International Conference on Management of Large-Scale System Development* (*MLSD*'2019), Moscow, Trapeznikov Institute of Control Sciences RAS, 2019, pp. 1066–1069. (In Russian.)
16. Samsonenko, F.A. and Khamidullin, F.F., Stress Testing: a Brief Review of Methods, *Vestn. TISBI*, 2017, no. 2, pp. 186–190. (In Russian.)
17. Lukianenko, I.G. Methods of Stress Testing of Financial Stability of Ukrainian Enterprises, Business Inform, 2013, no. 11, pp. 57–64.
18. Dranko, O.I., A Financial Prediction Model and Home Investment Scenarios, *Control Sciences*, 2007, no. 1, pp. 37–40. (In Russian.)
19. Irikov, V.A., Novikov, D.A., and Trenev, V.N., *Tselostnaya sistema gosudarstvenno-chastnogo upravleniya innovatsionnym razvitiem kak sredstvo udvoeniya tempov vykhoda Rossii iz krizisa i postkrizisnogo rosta* (An Integral Public-Private Management System for Innovation Development as a Means of Doubling the Pace of Russia's Recovery from Recession and

Post-crisis Growth), Moscow: Trapeznikov Institute of Control Sciences RAS, 2009. (In Russian.)
20. Balashov, V.G., Irikov, V.A., and Ivanova, S.I., *Rost i proryv v lidery: praktikum po preodoleniju krizisa* (Growth and Breakthrough to the Leaders: an Aid on Overcoming the Crisis), Moscow: Delo, 2009. (In Russian.)
21. Loginovskii, O.V., Hollay, A.V., Dranko, O.I., et al., *Effektivnoe upravlenie organizatsionnymi i proizvodstvennymi strukturami* (Effective Management of Organizational and Production Structures), Moscow: INFRA-M, 2020. (In Russian.)
22. Golov, O.E. and Irikov, V.A., *Instrumenty i primery povysheniya rezul'tativnosti i effektivnosti upravleniya soglasovannym razvitiem regiona i otraslei* (Tools and Examples of Increasing the Efficiency of Managing the Coordinated Development of the Region and Industries), Ufa: Belaya Reka, 2015. (In Russian.)
23. Dranko, O.I., Otarashvili, Z.A., and Sushkov, D.V., Cost Management under Program of Innovations, *Control Sciences*, 2012, no. 6, pp. 26–31. (In Russian.)
24. Burkova, I.V., Rossikhina, L.V., Meshcheryakova, T.V., and Burkov, V.N., Information Technologies for Development Management Systems, *Automation and Remote Control*, 2018, vol. 79, no. 10, pp. 1813–1822.
25. Akinfiev, V.K. and Tsvirkun, A.D., *Metody i instrumental'nye sredstva upravleniya razvitiem kompanii s slozhnoi strukturoi aktivov* (Methods and Tools for Managing the Development of Companies with a Complex Structure of Assets), Moscow: Trapeznikov Institute of Control Sciences RAS, 2020. (In Russian.)
26. Burkov, V., Burkova, I., Averina, T., and Perevalova, O., Integrated Technology for Creating Development Management Systems in the Field of Energy Saving, in *Advances in Intelligent Systems and Computing*, 2021, vol. 1258, pp. 588–600.

This paper was recommended for publication by V.V. Klochkov, a member of the Editorial Board.

Received June 11, 2021, and revised October 25, 2021. Accepted October 25, 2021

Author information

Bogomolov, Alexey Sergeevich. Dr. Sci. (Eng.), Institute for Problems of Precision Mechanics and Control, Russian Academy of Sciences, Saratov, Russia; Saratov State University, Saratov, Russia
✉ bogomolov@iptmuran.ru

Dvoryashina, Marina Mikhailovna. Cand. Sci. (Econ.), Trapeznikov Institute of Control Sciences, Russian Academy of Sciences, Moscow, Russia
✉ dvoryashina@gmail.com

Dranko, Oleg Ivanovich. Dr. Sci. (Eng.), Trapeznikov Institute of Control Sciences, Russian Academy of Sciences, Moscow, Russia
✉ olegdranko@gmail.com

Kushnikov, Vadim Alekseevich. Dr. Sci. (Eng.), Institute for Problems of Precision Mechanics and Control, Russian Academy of Sciences, Saratov, Russia
✉ kushnikoff@yandex.ru

Rezchikov, Alexander Fedorovich. Dr. Sci. (Eng.), RAS Corresponding Member, Trapeznikov Institute of Control Sciences, Russian Academy of Sciences, Moscow, Russia
✉ rw4cy@mail.ru

Cite this paper

Bogomolov, A.S., Dvoryashina, M.M., Dranko, O.I., Kushnikov, V.A., Rezchikov, A.F. Stress Testing of Non-Financial Organizations: An Analytical Approach to Solving the Reverse Problem, *Control Sciences* **6,** 13–24 (2021).
http://doi.org/10.25728/cs.2021.6.2

Translated into English by *Alexander Yu. Mazurov*,
Cand. Sci. (Phys.-Math.),
Trapeznikov Institute of Control Sciences,
Russian Academy of Sciences, Moscow, Russia
✉ alexander.mazurov08@gmail.com